1

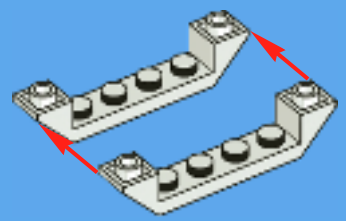

2

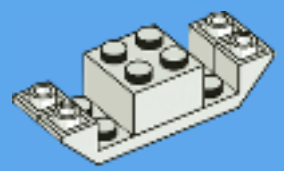

3

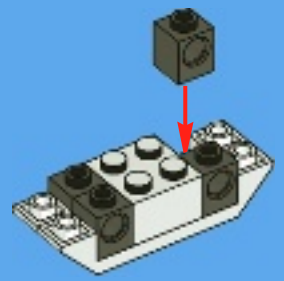

4

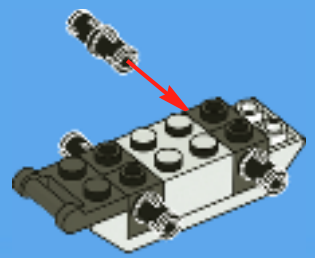

5

6

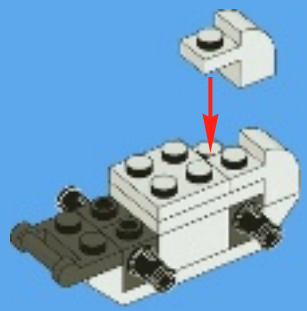

7

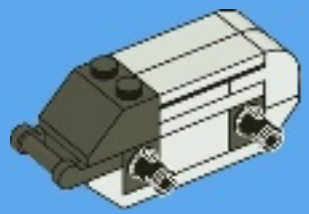

8

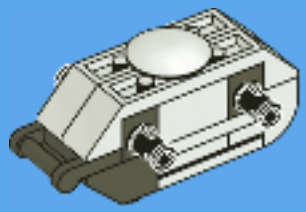

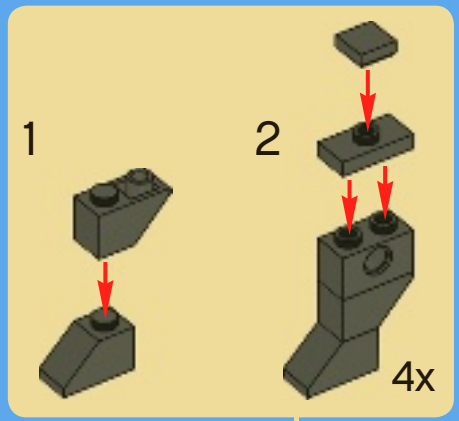

9

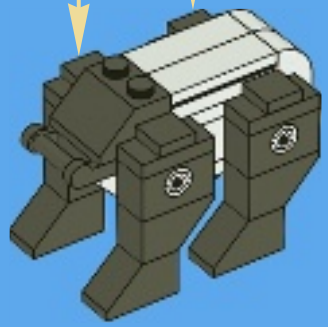

1

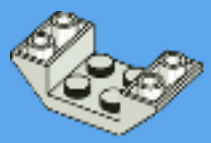

2

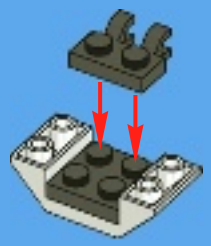

3

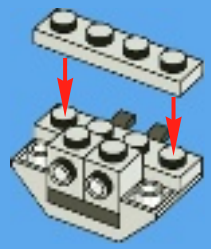

4

5

6

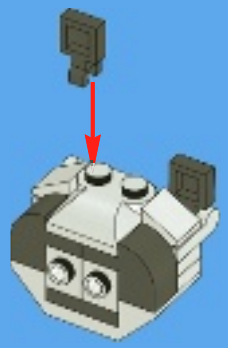

1

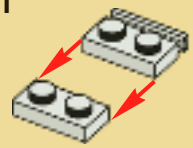

2

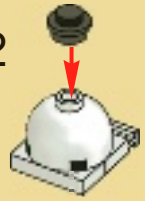

7

8

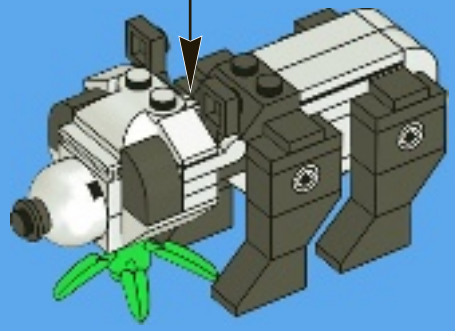

SERVICE ? ? WWW.LEGO.COM

www.LEGO.com

©2011 The LEGO Group. 4624481